HMB/HMHDB270

VALVE HOUSINGS

EXAMPLE FOR MODEL CODE –
HMB270/S/FM4/70

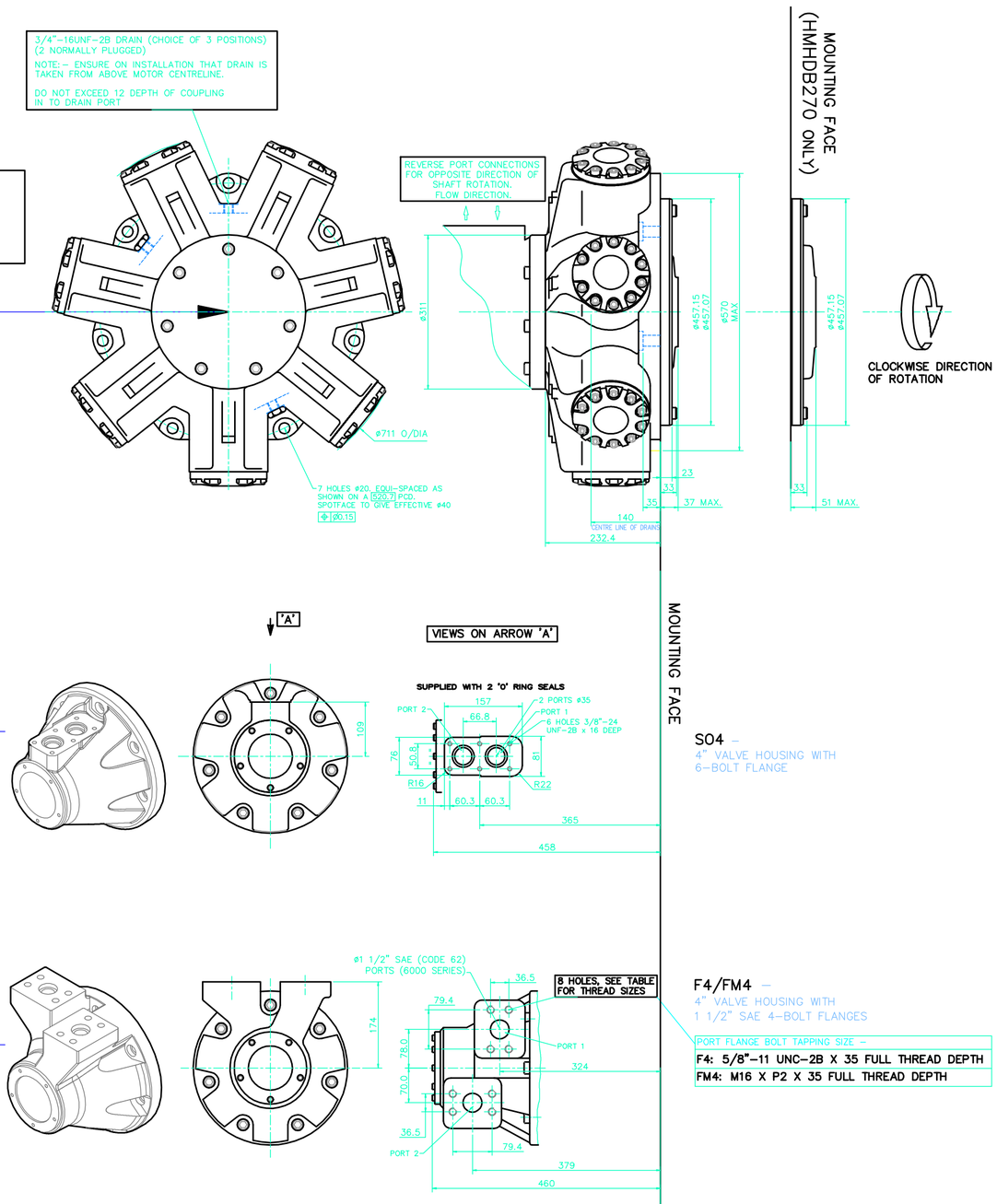

SO4 –
4" VALVE HOUSING WITH
6–BOLT FLANGE

F4/FM4 –
4" VALVE HOUSING WITH
1 1/2" SAE 4–BOLT FLANGES

PORT FLANGE BOLT TAPPING SIZE –
F4: 5/8"–11 UNC–2B X 35 FULL THREAD DEPTH
FM4: M16 X P2 X 35 FULL THREAD DEPTH

HMB SHAFTS

EXAMPLE FOR MODEL CODE –
HMB270/P1/FM4/70

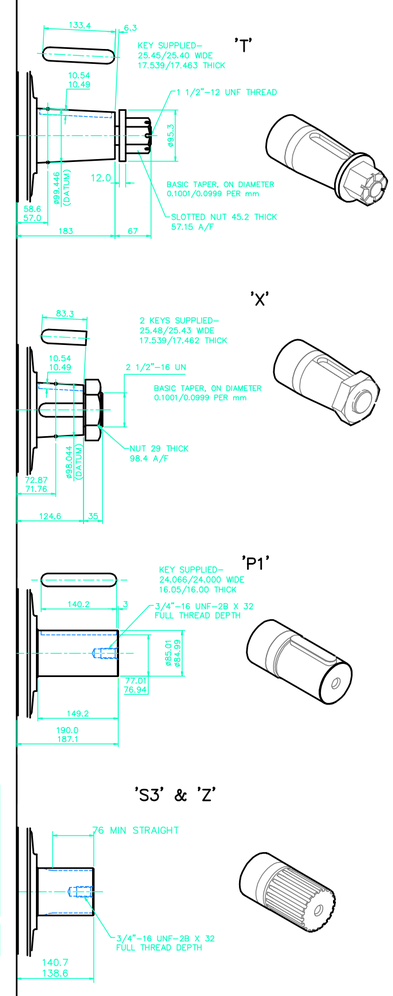

NOTE –
HOLLOW MOTORS WITH 26.2mm DIAMETER HOLE THROUGH MOTOR (e.g.–'HMB270/HP/S04/70'), AVAILABLE WITH S04 VALVE HOUSINGS ONLY. CONSULT KPMUK FOR DETAILS.

SPLINE DATA

'S3'

TO BS 3550 (ANSI B92.1, CLASS 5)	
FLAT ROOT SIDE FIT, CLASS 1	
PRESSURE ANGLE	30°
NUMBER OF TEETH	20
PITCH	6/12
MAJOR DIAMETER	87.953/87.825
FORM DIAMETER	80.264
MINOR DIAMETER	79.485/78.925
PIN DIAMETER	8.128
DIAMETER OVER PINS	97.084/97.030

'Z'
DIN 5480 W100 x 4 x 24 x 7h

HMHDB SHAFTS

EXAMPLE FOR MODEL CODE –
HMHDB270/P2/FM4/70

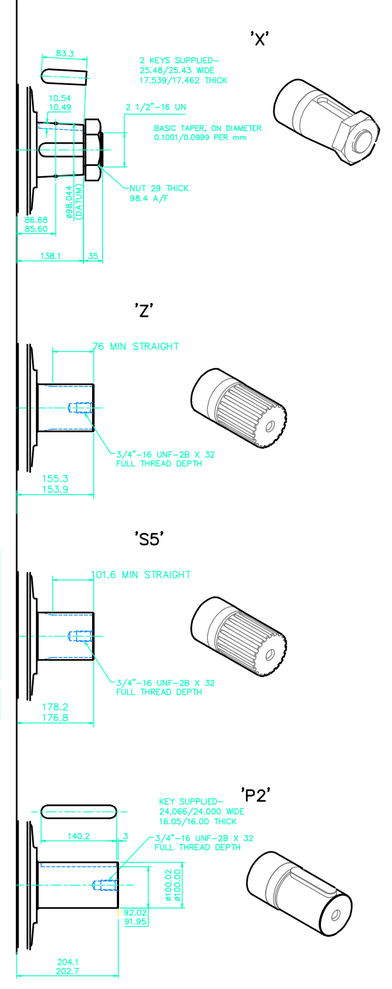

NOTE –
HOLLOW MOTORS WITH 26.2mm DIAMETER HOLE THROUGH MOTOR (e.g.–'HMHDB270/HP/S04/70'), AVAILABLE WITH S04 VALVE HOUSINGS ONLY. CONSULT KPMUK FOR DETAILS.

SPLINE DATA

'S3'

TO BS 3550 (ANSI B92.1, CLASS 5)	
FLAT ROOT SIDE FIT, CLASS 1	
PRESSURE ANGLE	30°
NUMBER OF TEETH	23
PITCH	6/12
MAJOR DIAMETER	100.653/100.526
FORM DIAMETER	92.939
MINOR DIAMETER	92.184/91.625
PIN DIAMETER	8.128
DIAMETER OVER PINS	109.573/109.517

'Z'
DIN 5480 W100 x 4 x 24 x 7h