HMB/HMHDB125

VALVE HOUSINGS

EXAMPLE FOR MODEL CODE –
HMB125/S/FM3/70

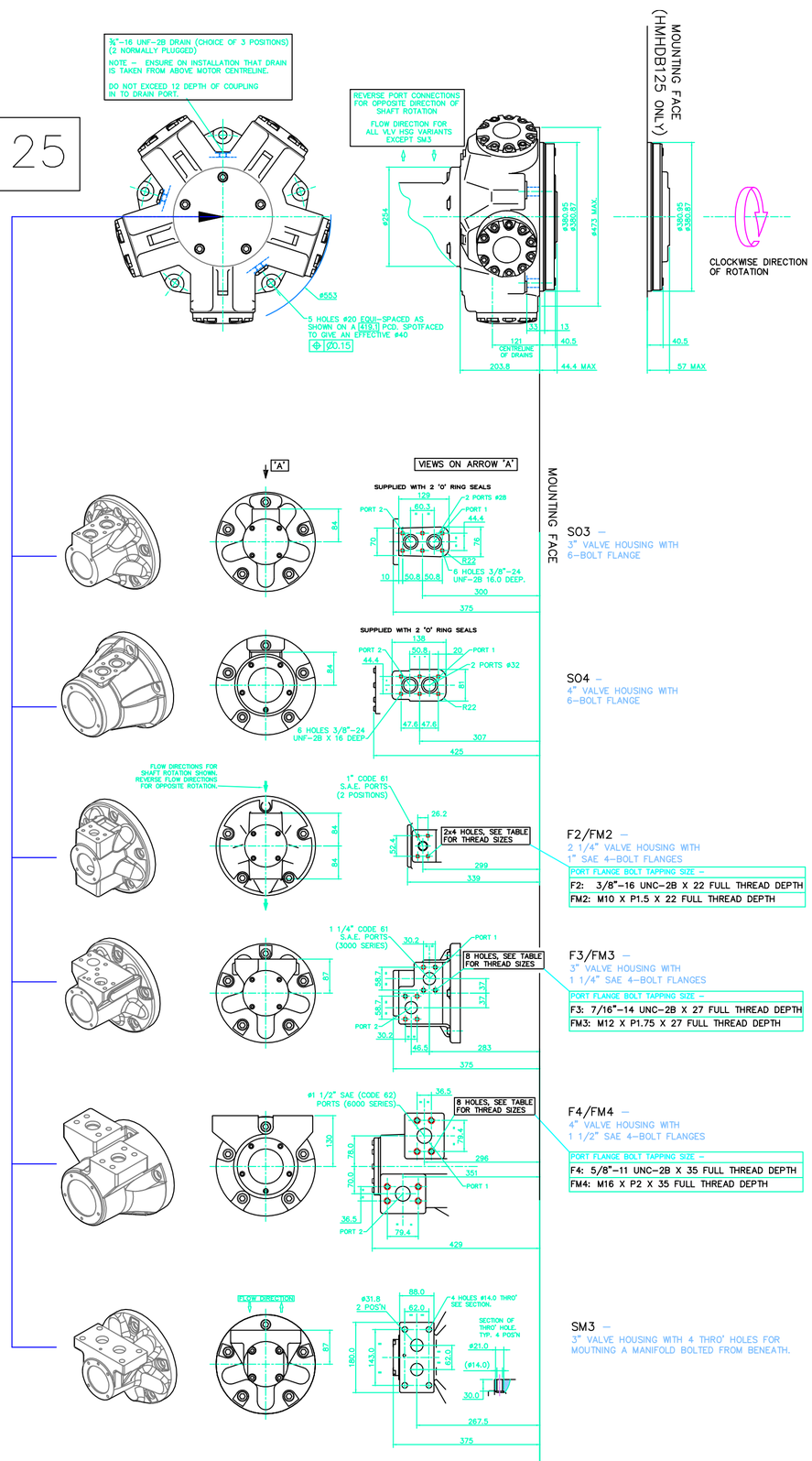

HMB SHAFTS

EXAMPLE FOR MODEL CODE –
HMB125/P1/FM3/70

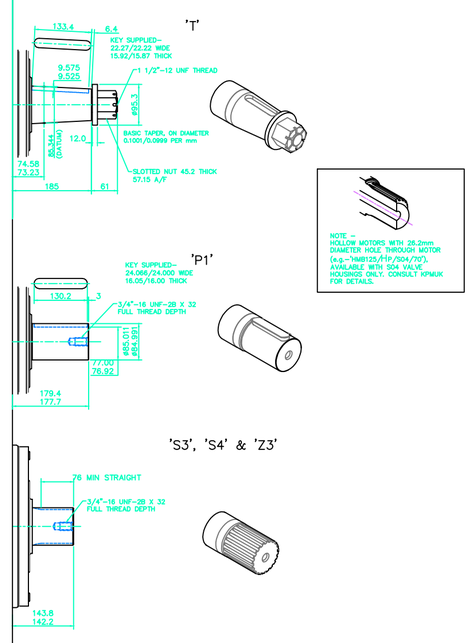

SPLINE DATA

'S3'	
TO BS 3550 (ANSI B92.1, CLASS 5)	
FLAT ROOT SIDE FIT, CLASS 1	
PRESSURE ANGLE	30°
NUMBER OF TEETH	20
PITCH	6/12
MAJOR DIAMETER	87.953/87.825
FORM DIAMETER	80.264
MINOR DIAMETER	79.485/78.925
PIN DIAMETER	8.128
DIAMETER OVER PINS	97.084/97.030

'S4'	
PRESSURE ANGLE	20°
NUMBER OF TEETH	16
PITCH	5/10
MAJOR DIAMETER	86.360/86.233
FORM DIAMETER	76.124
MINOR DIAMETER	74.93/72.39
PIN DIAMETER	8.636
DIAMETER OVER PINS	92.710/92.581

'Z3'
DIN 5480 W85 x 3 x 27 x 7h

HMHDB SHAFTS

EXAMPLE FOR MODEL CODE –
HMHDB125/P1/FM3/70

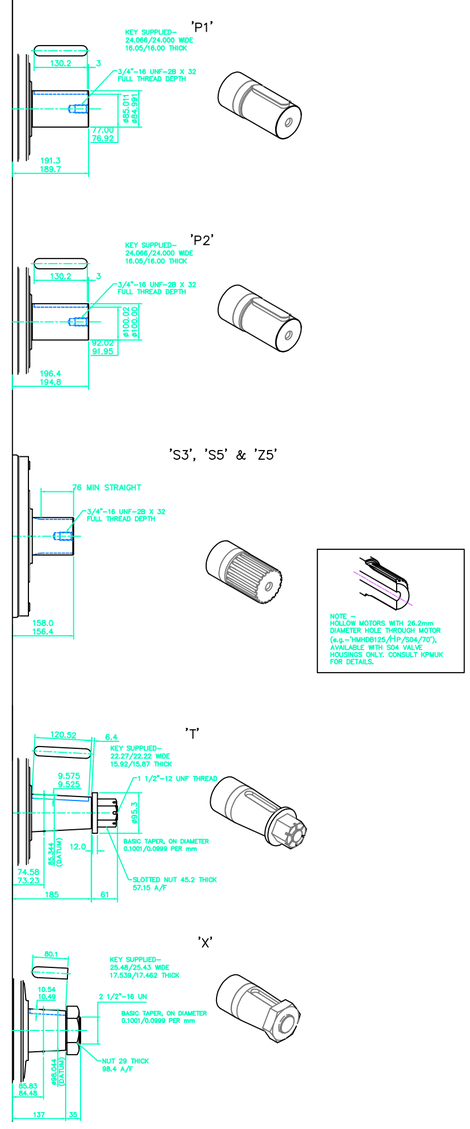

SPLINE DATA

'S3'	
TO BS 3550 (ANSI B92.1, CLASS 5)	
FLAT ROOT SIDE FIT, CLASS 1	
PRESSURE ANGLE	30°
NUMBER OF TEETH	20
PITCH	6/12
MAJOR DIAMETER	87.953/87.825
FORM DIAMETER	80.264
MINOR DIAMETER	79.485/78.925
PIN DIAMETER	8.128
DIAMETER OVER PINS	97.084/97.030

'S5'	
PRESSURE ANGLE	20°
NUMBER OF TEETH	23
PITCH	6/12
MAJOR DIAMETER	100.652/100.526
FORM DIAMETER	92.939
MINOR DIAMETER	92.184/91.626
PIN DIAMETER	8.128
DIAMETER OVER PINS	109.573/109.517

'Z5'
DIN 5480 W100 x 4 x 24 x 7h